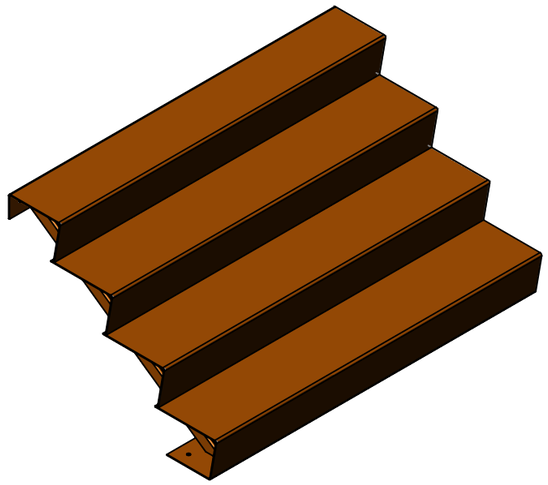

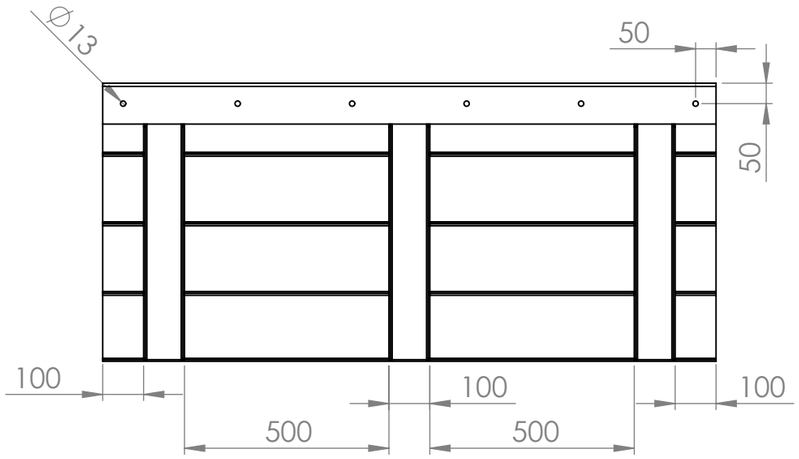

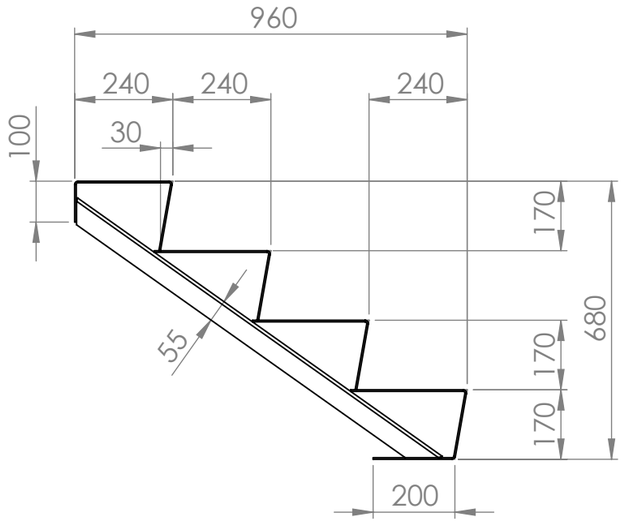

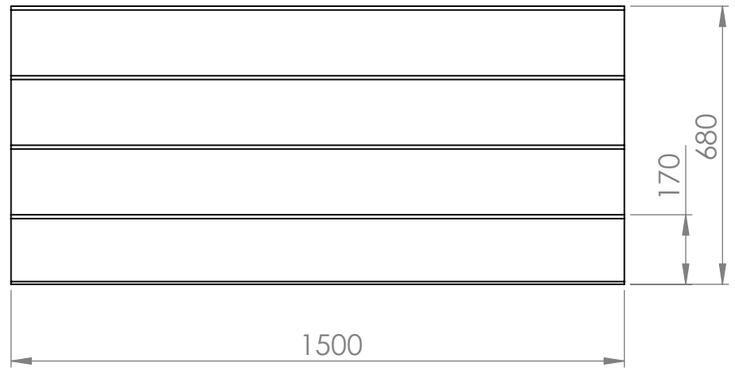

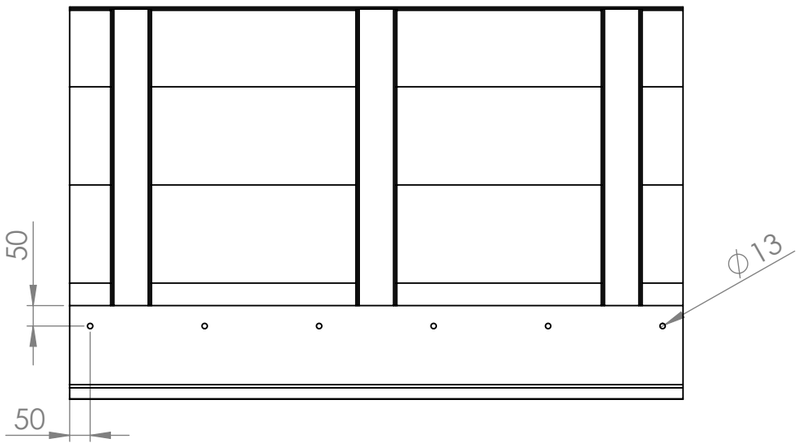

		DATE
DRAWN	Joris Koppens	25-10-2019
REVISION		

ADEZZ®
WE PRODUCE GARDEN PRODUCTS FOR PROFESSIONALS

Liessentstraat 4, 5405 AG Uden (NL).
t 0031 (0)413 - 27 41 68.
e info@adezz.com, i www.adezz.com

TITLE:

4mm Corten

Drawing.

CST4.3 Product

A3

Color: -

Mass (kg): **115.02**

SCALE:1:15

SHEET 1 OF 6